Artwork Approval

Your Ref:
Our Ref:

Quantity:
Version: 1

Product Code: EC8046
Product Colour:

PRODUCT NOTES:

We stock this item in the following colours

The dashed line is to demonstrate print area and will not appear on your printed item

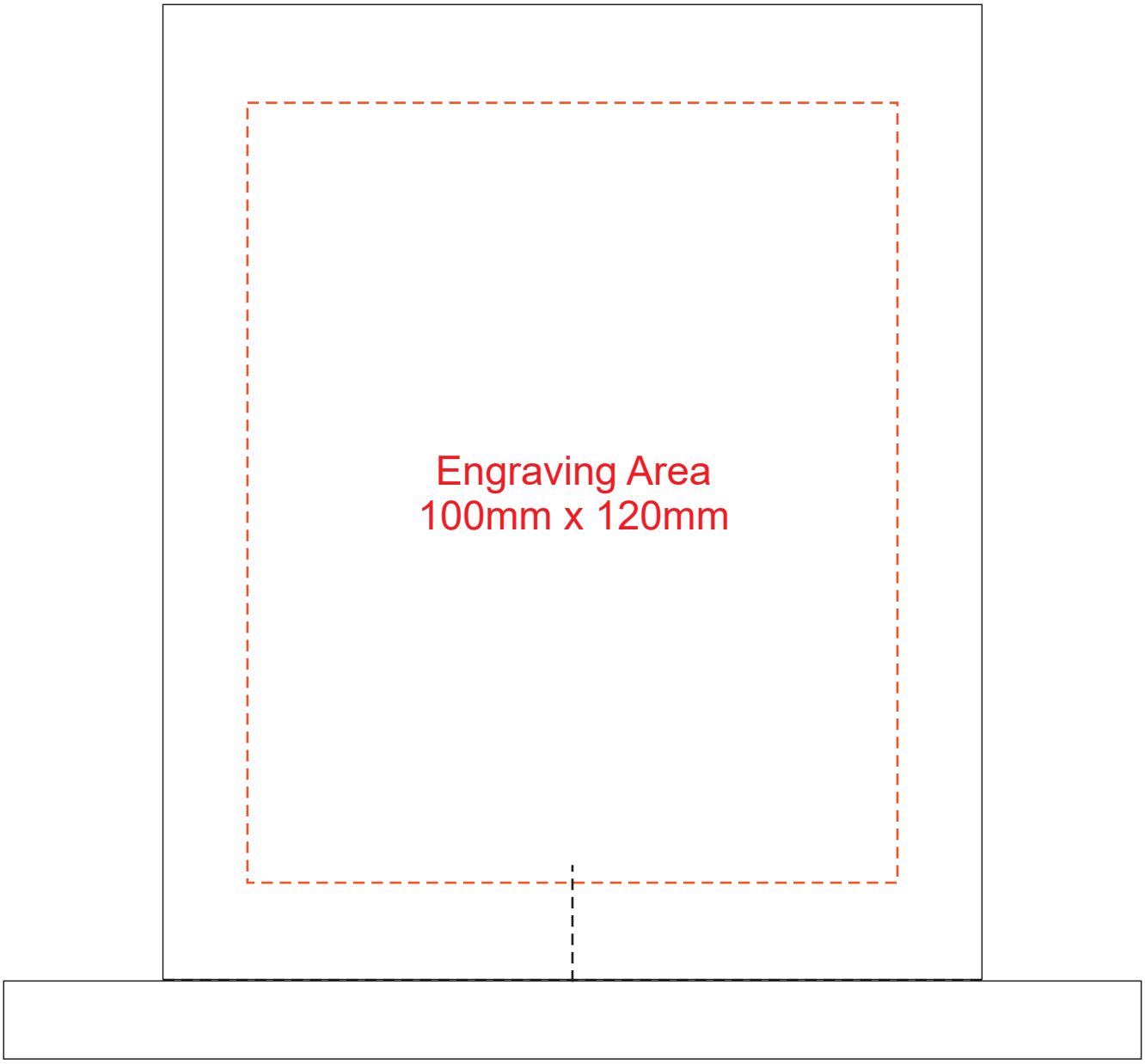

Please check the following are correct

QUANTITY ☑ CORRECT PRODUCT and PRODUCT COLOUR ☑ PRINT SIZE and POSITION ☑ PRINT COLOUR ☑ SPELLING, PHONE NUMBERS, EMAILS and WEBSITES ☑